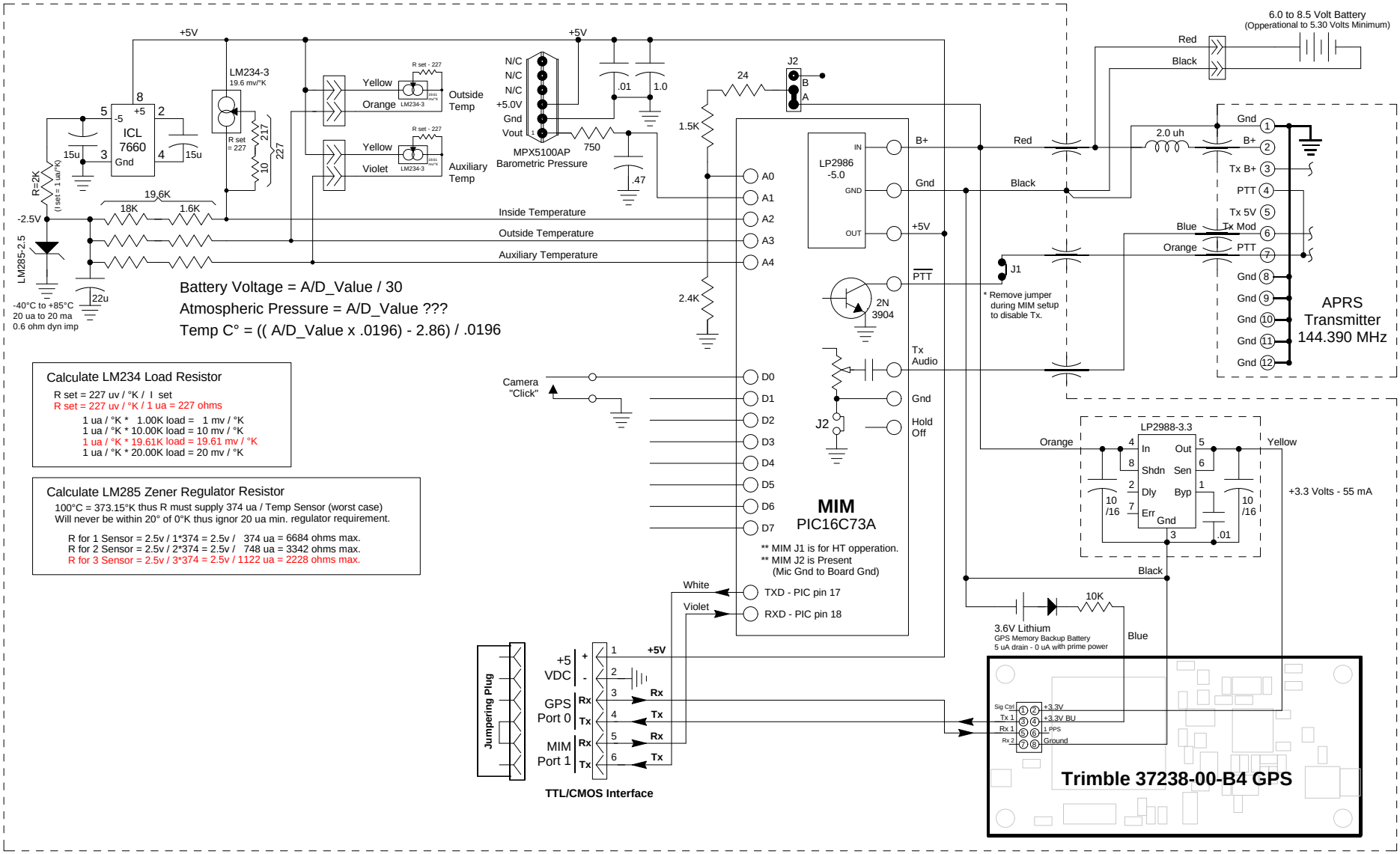

BEAR 2 Tracker Schematic